Processing of TPU by Injection Molding

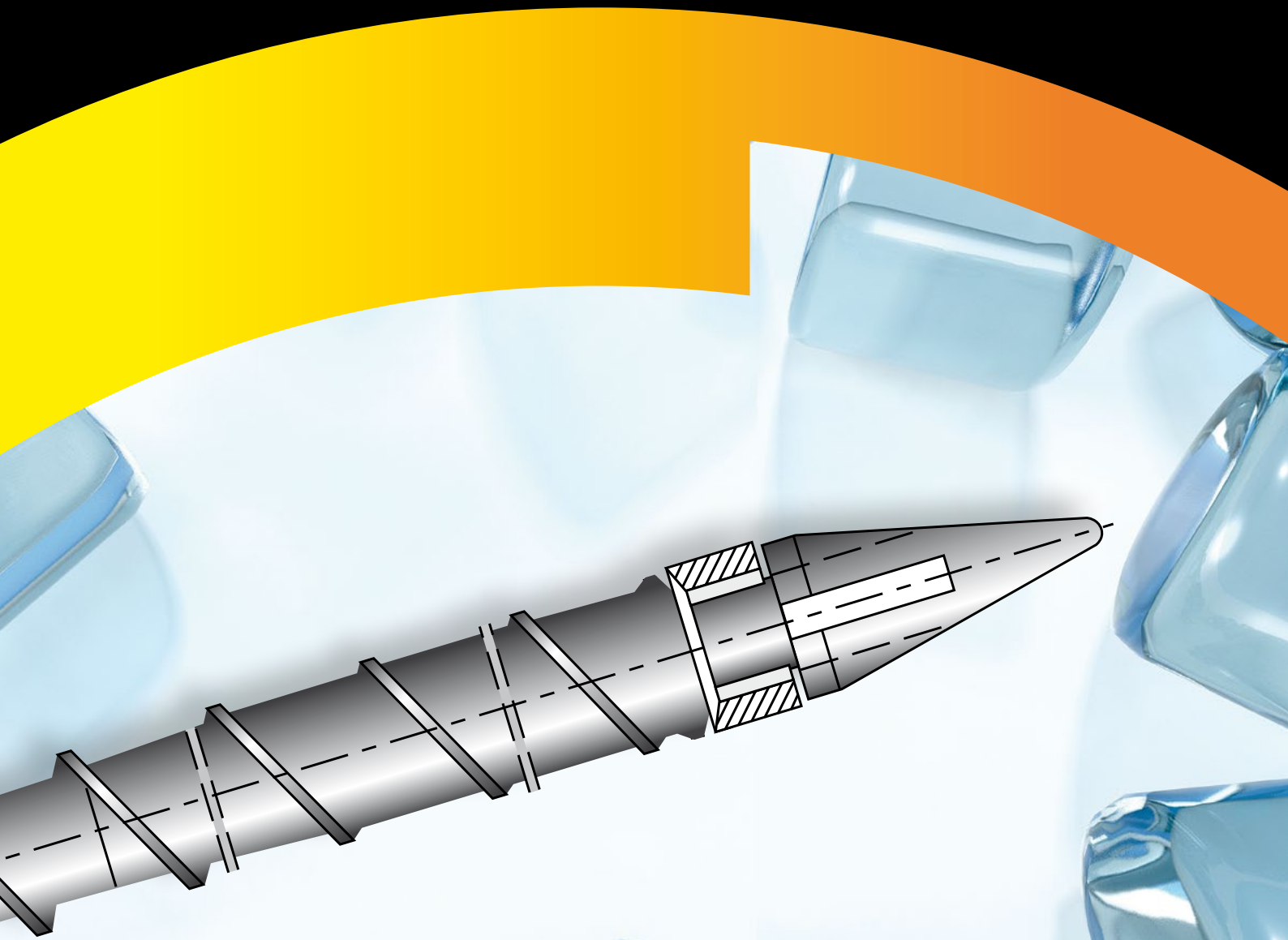

2026-02-12 15:00:00 Distribuited by Mito polimeri

Contents

1. Product description 4

2. General remarks 6

2.1 Form supplied 6
2.2 Storage 6
2.3 Pretreatment of the granules 6
2.4 Post-treatment of the finished articles 8
2.5 Coloring 8
2.5.1 Color masterbatches 8
2.5.2 Color pastes, liquid colors and pigments 9
2.6 Additives 9
2.7 Occupational hygiene and environmental information 9
2.7.1 Air extraction 9
2.7.2 Waste disposal 9
2.7.3 Energy efficiency 9

3. Processing by injection molding 10

3.1 General 10
3.2 Processing parameters 12
3.2.1 Temperature settings for cylinder and mold 12
3.2.2 Plastication 13
3.2.3 Injection pressure, holding pressure, injection speed 14
3.2.4 Cycle times 14
3.2.5 Demolding 15
3.3 Regrind usage 15
3.4 Tools for injection molding 16
3.4.1 Mold design 16
3.4.2 Gating 16
3.4.3 Hot runner technique and hot runner nozzles 19
3.4.4 Flow characteristics of the mold 22
3.4.5 Mold venting 22
3.4.6 Shrinkage 23
3.4.7 Demolding 24
3.4.7.1 . Cavity surface 24
3.4.7.2 . Drafts 24
3.4.7.3 . Ejectors 25

2026-02-12 15:00:00 Distributed by Mito polimeri

4. Machining and fabrication 26

4.1 Bonding 26
4.2 Bonding to metals 26
4.3 Printing 26
4.3.1 Hot embossing / Hot stamping 26
4.3.2 Ink-jet printing. 26
4.3.3 Pad printing 26
4.3.4 Laser printing 26
4.4 Coating 26
4.5 Metallizing 26
4.6 Welding 27
4.6.1 Hot air and nitrogen welding 27
4.6.2 Hot plate welding. 27
4.6.3 Heated tool and heat impulse welding 27
4.6.4 High-frequency welding 27
4.6.5 Friction welding. 27
4.6.6 Vibration welding. 28
4.6.7 Ultrasonic welding 28
4.7 Machining 28
4.7.1 Sawing 29
4.7.2 Drilling. 29
4.7.3 Turning 29
4.7.4 Milling and planing 29
4.7.5 Punching 29
4.7.6 Thread cutting 29
4.7.7 Grinding. 29

5. Index 30

Desmopan® Texin® Utechllan®

2026-02-12 15:00:00 Distributed by Mito polimeri

1. Product description

Covestro’s TPU ...

are thermoplastic polyurethanes. Their properties qualify them as high-grade thermoplastic elastomers (TPEs) that bridge the gap between rubber and traditional thermoplastic materials.

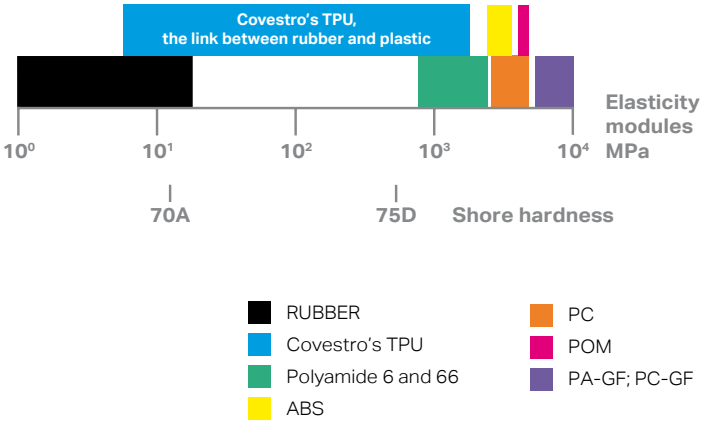



2026-02-12 15:00:00 Distribuited by Mito polimeri



The main advantages

- High abrasion resistance
- High elasticity over the entire hardness range
- Excellent low-temperature impact strength
- Flexibility over a wide temperature range
- Freedom from plasticizers
- Excellent resistance to oils, greases and many solvents
- Good resistance to weathering and high-energy radiation
- Pleasant tactile properties
- Weldable and bondable
- Easy coloring
- Easy recycling
- Excellent rot resistance (special grades)

2. General remarks

Covestro's TPU can be processed on the equipment normally used for processing thermoplastics. The most important processing techniques are:

Injection molding
Extrusion
Blow molding

2.1 Form supplied

Covestro's TPU are supplied as natural-colored cylindrical or lentil-shaped granules. Depending on the particular grade, the color ranges from transparent / clear and whitish opaque to white.

The product can be supplied in quantities of between 20kg and 1,000kg, depending on the grade. For sampling purposes, 20kg or 25kg sacks or plastic drum with a content of 20kg can be supplied.

2.2 Storage

Covestro's TPU should be stored in cool, dry conditions. Temperatures above 40°C should be avoided. Optimum processing is ensured within approximately 6 months after delivery.

2.3 Pretreatment of the granules

TPU absorb moisture from the air. The extent and rate at which this happens depends on the raw material type, hardness and climate *(Figs. 1 and 2)*.

Moisture absorption of Covestro's TPU granules (at 23°C/50% r. h.)

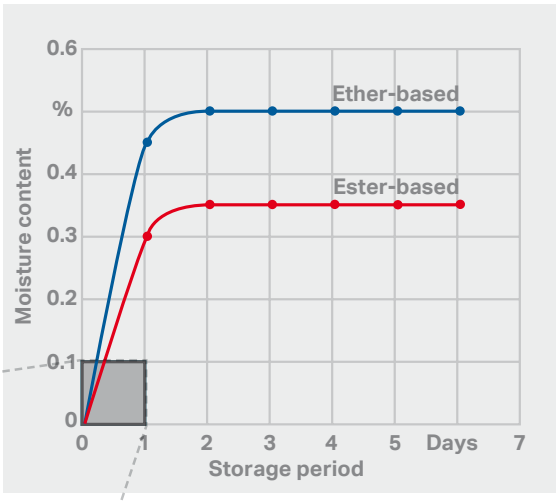

Fig. 1

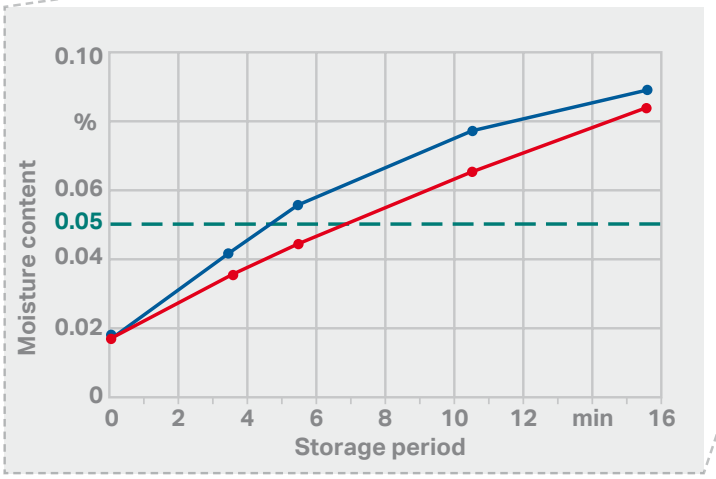

Fig. 2

Ether-based TPU
Ester-based TPU
Threshold value for optimum processing

2026-02-12 15:00:00 Distributed by Mito polimeri

To ensure trouble-free processing and avoid any loss of quality, we recommend drying to a moisture content of ≤ 0.05%.

If the granules are too moist, blisters or streaks can occur on the surface of the finished components. The extrudate is no longer smooth and glossy but foamy and gassy.

A frequent cause of defects is also the use of undried functional concentrates. These batches should be separately pre-dried and have a moisture content of ≤ 0.05%. Such levels can be reliably reached in conventional dry-air and circulating air dryers *(Fig. 3)*.

Depending on the hardness, the recommended drying temperatures are between 80 and 110°C, with drying times of 1 to 3 hours. Better drying can be achieved in a shorter time with dry-air dryers *(Fig. 4)*.

Dried, hot granules should not be left to cool down in the open air. They must be stored in dry containers that can be re-sealed. The machine hopper must be kept covered.

Operation of a dry-air dryer

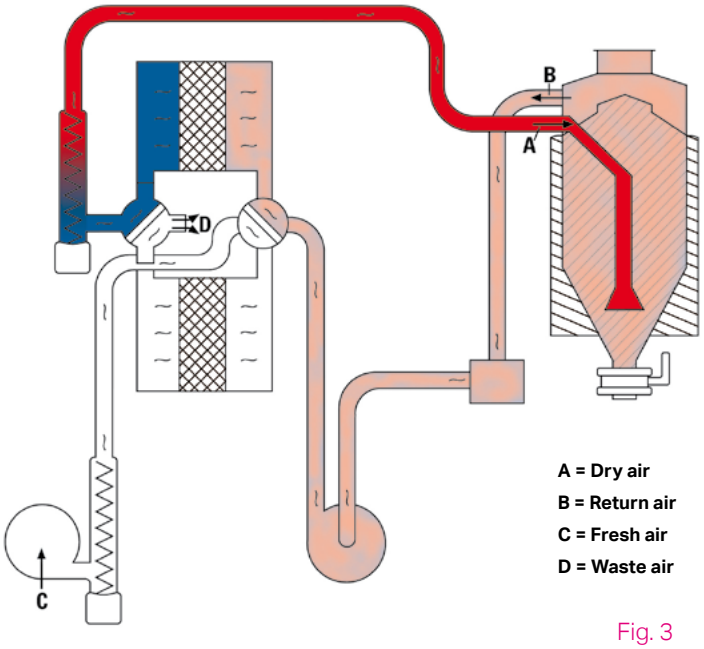

Fig. 3

Drying kinetics for Covestro's TPU granules

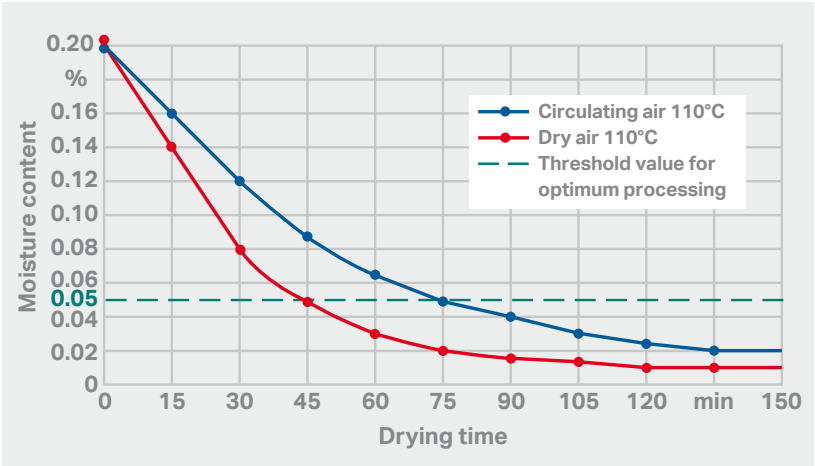

Fig. 4

2026-02-12 15:00:00 Distributed by Mito polimeri

2. General remarks

2.4 Post-treatment of the finished articles

TPU products attain their optimum physical property level only after they have spent some time at room temperature. This process can be speeded up by an annealing process in a circulating air heating oven, reducing it to 15 to 20 hours.

For articles with a hardness of ≤ 92 Shore A, we recommend annealing at 80-90°C, and for a hardness of ≥ 93 Shore A, 100-110°C. The optimum compression set can only be achieved by annealing!

The physical data given in our data sheets are always measured on annealed, conditioned test specimens.

2.5 Coloring

Covestro's TPU are supplied in their natural color and can easily be pigmented, most commonly using color granules (masterbatches), but also using coloring pastes, liquid colors or pure pigments.

Standard commercial equipment can be used to add the colorants and mix them in with the Covestro's TPU. For occasional coloring, use rolling-drum mixers, tumble mixers or similar. It is important to ensure that the colorants and other additives do not contain any moisture. A static mixer in the adapter will significantly improve color dispersion and also reduce the amount of colorant needed.

2.5.1 Color masterbatches

Color masterbatches provide the simplest, cleanest and most reliable means of coloring Covestro's TPU, particularly when Covestro's TPU are also the carrier materials. SAN-resin-based color granules are also suitable to a limited extent. Color granules based on polyolefins and PVC are not suitable. Suppliers normally recommend employing metering quantities of between 1.0 and 4.0% depending on the wall thickness of the articles and the color density of the pigments.

2026-02-12 15:00:00 Distribuited by Mito polimeri

2.5.2 Color pastes, liquid colors and pigments

It is less common to use color pastes, liquid colors and pigments to color Covestro's TPU because of the more complicated procedure involved. However, there may be benefits in the form of fast color changes and transparent pigmentation. The standard quantities generally range from 0.2 to 1.0%.

2.6 Additives

To improve the processing characteristics or specific properties, we recommend the addition of conventional functional concentrates such as:

- antiblocking agents,
- release aids, and
- UV stabilizers,

which must also be pre-dried.

2.7 Occupational hygiene and environmental information

2.7.1 Air extraction

Covestro's TPU can be machined and processed over a wide temperature range but, as with all natural and synthetic organic materials, they decompose above a certain temperature. Smoke generation signifies that decomposition is taking place. Slow decomposition commences at approximately 240°C, depending on the grade of Covestro's TPU involved. Further information is given in our Safety Data Sheets.

For reasons of occupational hygiene, we recommend efficient air extraction, especially when extruding and welding.

2.7.2 Waste disposal

Provided that they are not contaminated with other substances, Covestro's TPU can essentially be disposed of in municipal landfill sites. They do not constitute a hazard to water.

If the materials can no longer be recycled, they should be incinerated in a waste incineration plant on account of their high calorific value.

2.7.3 Energy efficiency

Thermoplastic polyurethanes are demanding, high-performance materials that can reach their full potential only by precise and optimum processing.

All process steps in the processing of TPU (pre-drying, molding, post-treatment) are associated with a high consumption of energy. Following the recommended processing parameters is very important. The energy efficiency of the processing equipment is of great importance for economic and environmentally friendly processing.

Therefore, we recommend paying attention to modern, precise controlling and energy-efficient machinery.

2026-02-12 15:00:00 Distributed by Mito polimeri

3. Processing by injection molding

Optimum processing of TPU is only ensured if the material has a residual moisture content of < 0.05%. (Detailed information on the topic "Drying of TPU" and the handling of additive batches can be found on pages 6-9). In practice, injection molding machines with single-flighted three-zone screws of normal length have proven suitable for processing Covestro's TPU. If a higher plasticating capacity (throughput) is needed, longer screws are preferable *(Fig. 5)*.

3.1 General

Due to the high shear stress, short-compression-zone screws are unsuitable. The high plasticating energy needed for TPU requires a high torque for the screw drive. Insufficient torque leads to fluctuations in the screw speed and thus to non-uniform homogenizing.

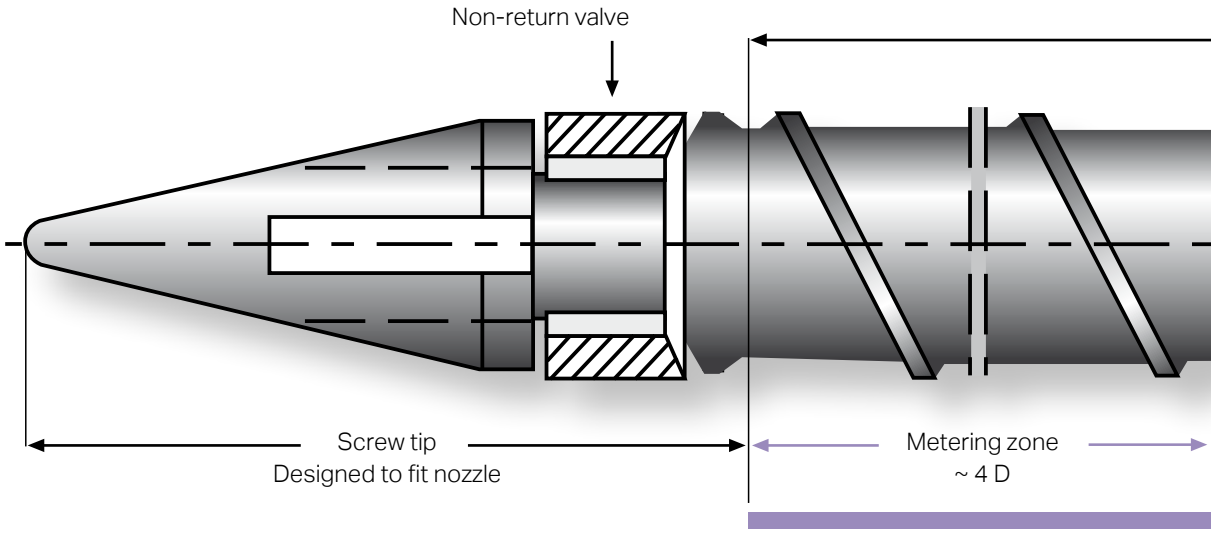

2.75mm
3.50mm
4.00mm
4.50mm

2026-02-12 15:00:00 Distribuited by Mito polimeri

Higher cylinder temperatures will give better results to some extent, although there is then a risk of the material overheating. The nozzle and cylinder head should be designed in such a way that there are no dead spots in which the material can become lodged and thus become thermally damaged.

Accurate temperature control for the cylinder and nozzle heating system is essential.

Care must be taken that the nozzle is heated evenly over its entire length. Only in this way can local overheating or possible "freezing" of the melt be prevented.

Molten Covestro's TPU are neither corrosive nor abrasive. For this reason, there is no need for any special steel alloy or armor-plating of the screw.

Injection molding screw for processing Covestro's TPU

Fig. 5

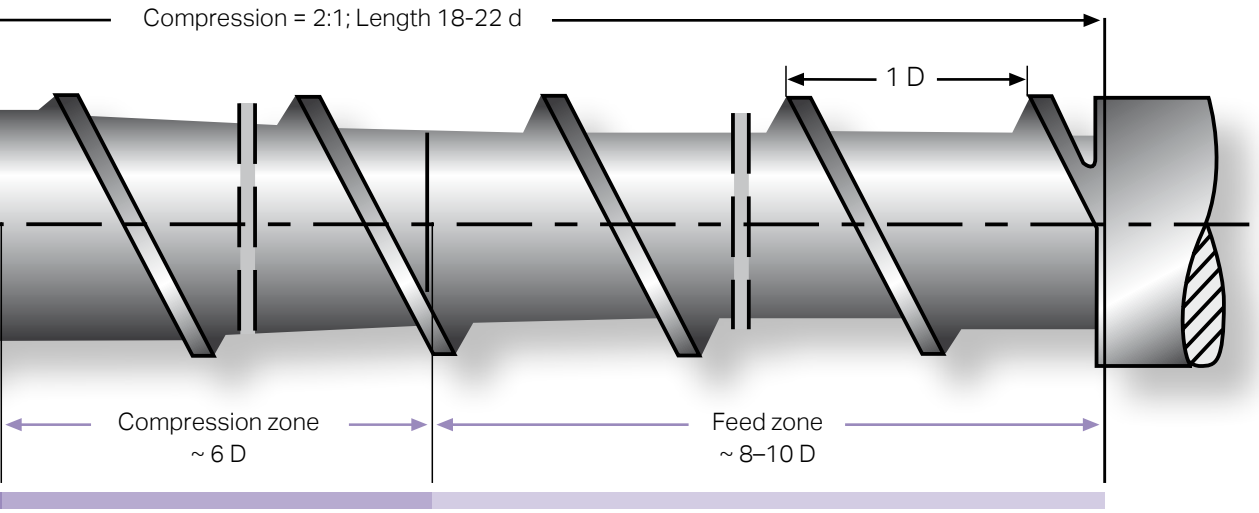

Flight depths for 45mm Ø	5.50mm
Flight depths for 65mm Ø	7.00mm
Flight depths for 85mm Ø	8.00mm
Flight depths for 100mm Ø	9.00mm

2026-02-12 15:00:00 Distributed by Mito polimeri

3. Processing by injection molding

3.2 Processing parameters

3.2.1 Temperature settings for cylinder and mold

Injection unit
Covestro's TPU should be processed at melt temperatures of between 190 and 220°C. With some hard grades, a melt temperature of up to 260°C may be needed. The melt temperature ranges for the individual Covestro's TPU grades can be found in the relevant product information sheets.

Fig. 6 shows guide values for the settings for cylinder and nozzle heating in relation to the shore hardness.

As a rule, small injection molding machines need a higher temperature setting than large ones.

Mold
The mold temperature has a major influence on the quality of the surface and the demold-

Temperature profile according to hardness range

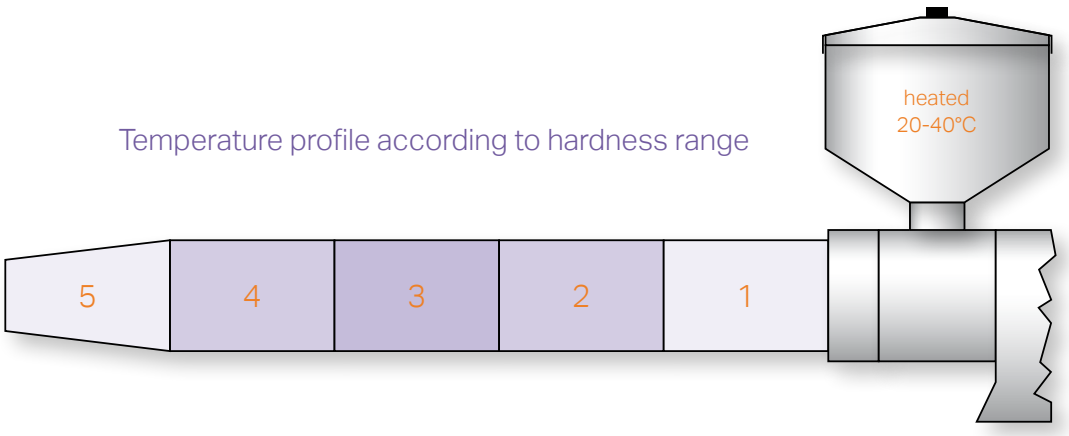

	5	4	3	2	1	Shore hardness
C°	190 to 200	200 to 230	190 to 210	170 to 200	160 to 180	70 to 85 Shore A
C°	190 to 220	200 to 220	200 to 220	180 to 210	170 to 200	85 to 95 Shore A 35 to 50 Shore D
C°	220 to 240	230 to 250	220 to 240	210 to 230	210 to 230	50 to 74 Shore D

Fig. 6

2026-02-12 15:00:00 Distribuited by Mito polimeri

ing behavior. It also affects shrinkage and internal (frozen-in) stresses in the final component. Mold temperatures of between 20 and 40°C are generally employed. A number of modified and glass-fiber grades of Covestro's TPU and Texin™ require mold temperatures of up to 80°C in order to achieve an optimum surface finish. With thick-walled articles, cooling down to approximately 5°C can bring a reduction in cycle time.

3.2.2 Plastication

For plastication, the speed should be selected in such a way that the peripheral velocity of the screw does not exceed 0.3m/s. The metering stroke should be between 1D and 3D (max. 4D). *Fig. 7* shows the maximum speeds for various screw diameters.

Practical experience has shown that a 30-75% capacity utilization of the respective cylinder is beneficial.

If the shot volume is very low in relation to the capacity of the cylinder, the dwell time of the melt in the plasticating unit will be very long indeed. This could result in thermal damage to the melt *(Fig. 8)*.

The back pressure required to support uniform melting will generally be 100 ± 50 bar (and the hydraulic pressure generally 5 to 20 bar).

Screw speed range as a function of diameter

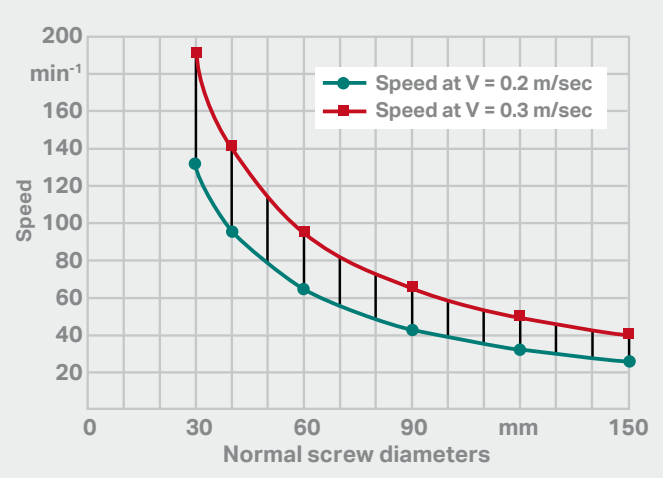

Fig. 7

Breakdown of the TPU melt in the processing cylinder at a melt temperature of 220°C TPU 90 Shore A

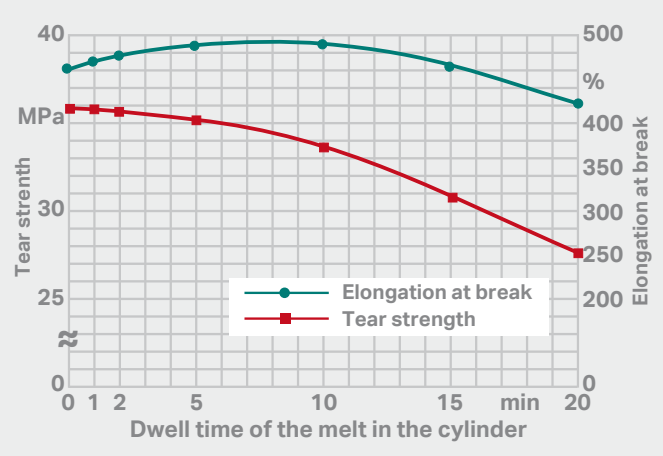

Fig. 8

2026-02-12 15:00:00 Distribuited by Mito polimeri

3. Processing by injection molding

3.2.3 Injection pressure, holding pressure, injection speed

For perfect processing, stepless control of the pressures and injection speeds is essential. It should be possible to regulate the injection and holding pressure in a range from 100 to 1,200 bar. The injection speed will depend primarily on the wall thickness. In general, thick-walled articles require slow filling of the mold, and thin-walled articles fast filling.

Apart from the wall thickness and type of gating, the venting of the mold plays an important role in the injection speed. This helps to avoid so-called "burn marks" caused by highly compressed hot air.

The biggest influence on the dimensional stability and demoldability of the component is exerted by the injection pressure / holding pressure. Excessive injection pressure overloads the molding, while too low a holding pressure produces sink marks.

Overloaded moldings are more difficult to demold. It is advisable to work with staggered pressures, with the holding pressure being set lower than the injection pressure. As a rule, a holding pressure of 50% of the injection pressure will be adequate. This enables articles to be produced with a minimum of internal stresses. *Fig. 9* shows a typical cycle.

3.2.4 Cycle times

The cycle time is governed by the shape of the article, the wall thickness, the cooling of the mold and the material itself. *Fig. 10* shows how the wall thickness affects the duration of an injection cycle, measured for three grades of Covestro's TPU: hard, medium and soft.

Cycle sequence in Covestro's TPU processing

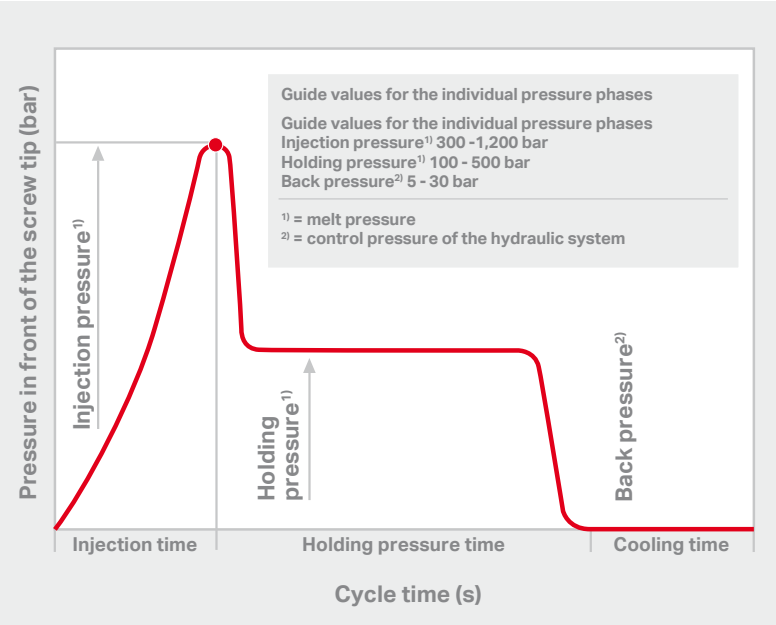

Fig. 9

2026-02-12 15:00:00 Distributed by Mito polimeri

Holding pressure and cooling time as a function of wall thickness and shore hardness

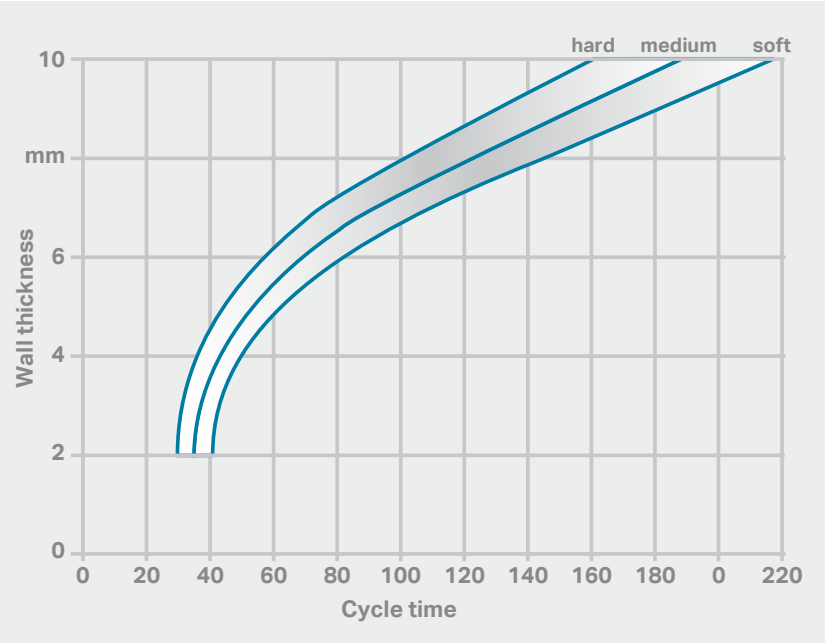

Fig. 10

Tensile strength and elongation at break vs. number of moldings

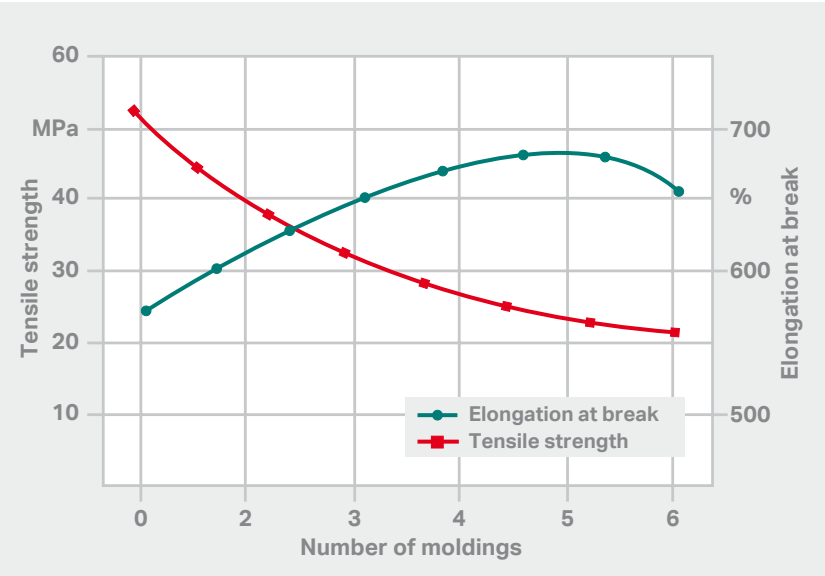

Fig. 11

3.2.5 Demolding

Covestro's TPU reproduce mold detail very well indeed. Particularly with the soft TPU grades, this can lead to more pronounced wall adhesion. This must be taken into account when designing the mold.

Release agents can be used as demolding aids. Silicone-based release agents have given good results here. Silicone-free release agents are also suitable but must be applied more frequently.

3.3 Regrind usage

The clean, sorted scrap resulting from the processing of Covestro's TPU can be recycled after appropriate treatment and drying. The proportion of recycled material should not, however, be more than 30%. *Fig. 11* illustrates the change in the mechanical properties of a selected TPU grade using 100% regrind material each time.

2026-02-12 15:00:00 Distributed by Mito polimeri

3. Processing by injection molding

3.4 Tools for injection molding

3.4.1 Mold design

Molds for Covestro's TPU should be made of the same kind of steel as is used for molding thermoplastics. Simple molds for small production runs can also be made of aluminum alloys.

For prototype trial molds, inserts of casting resin or pressure die-cast metal could even be used.

Design of a sprue bushing Fig. 12

Hard thermoplastics

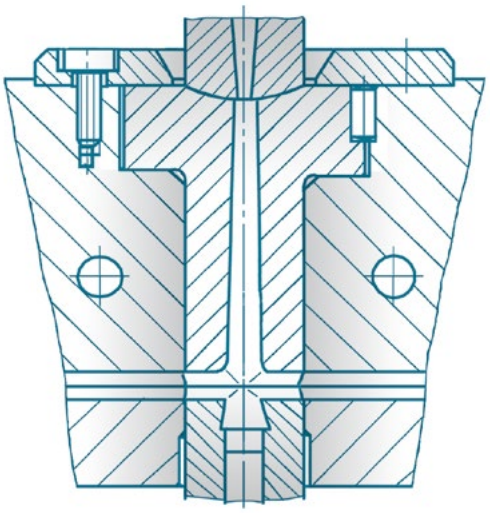

Covestro's TPU

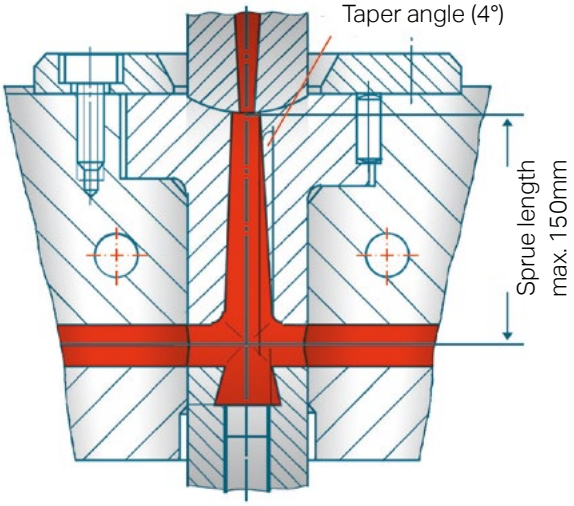

The following types of mold are suitable for processing Covestro's TPU:

- **Two-plate mold**
- **Three-plate mold**
- **Split mold**
- **Positive mold**
- **Multi-daylight mold**

3.4.2 Gating

The following types of gate are commonly used for Covestro's TPU:

- **Edge gate**
- **Film gate**
- **Diaphragm gate**
- **Pinpoint gate**
- **Ring gate**
- **Sprue gate**
- **Tunnel gate**
- **Hot runner gate**

The gates, runners and sprues should be 25-50% larger than with hard thermoplastics *(Fig. 12)*. Significant pressure drops in the gating system should be avoided.

2026-02-12 15:00:00 Distributed by Mito polimeri

Runner cross sections

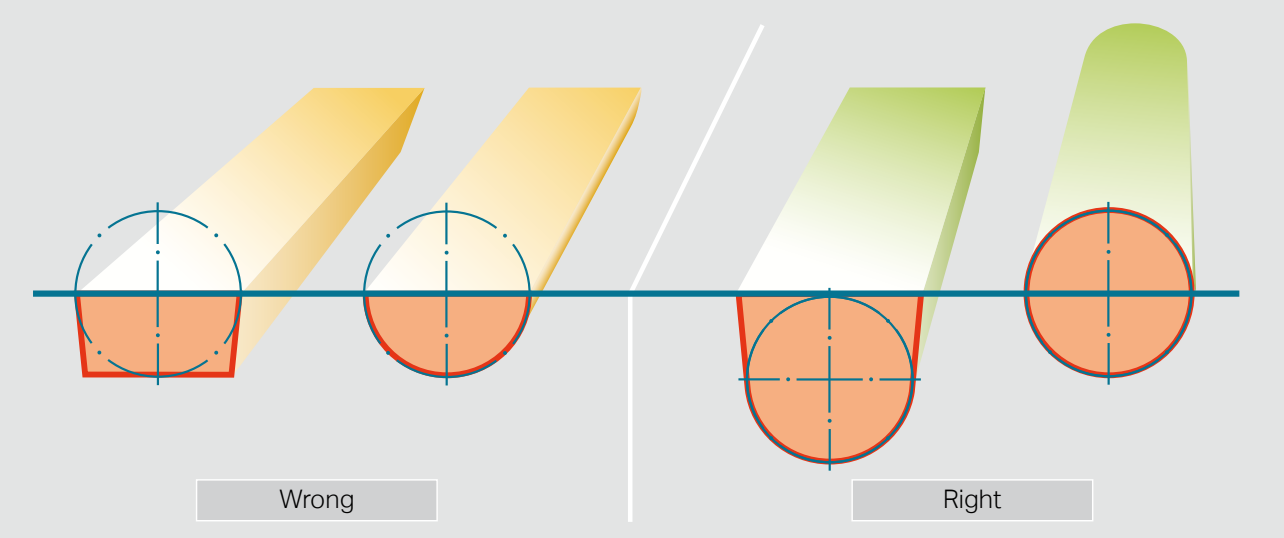

Fig. 13

As far as the runners are concerned, the flow channel must be designed in such a way that the full diameter of the runner is used and that it is positioned in one or both halves of the mold *(Fig. 13)*.

In multi-cavity molds, e.g., two-plate or three-plate types, the runners should be arranged in such a way that the flow paths are all roughly the same length *(Fig. 14)*.

Runners for multi-cavity molds

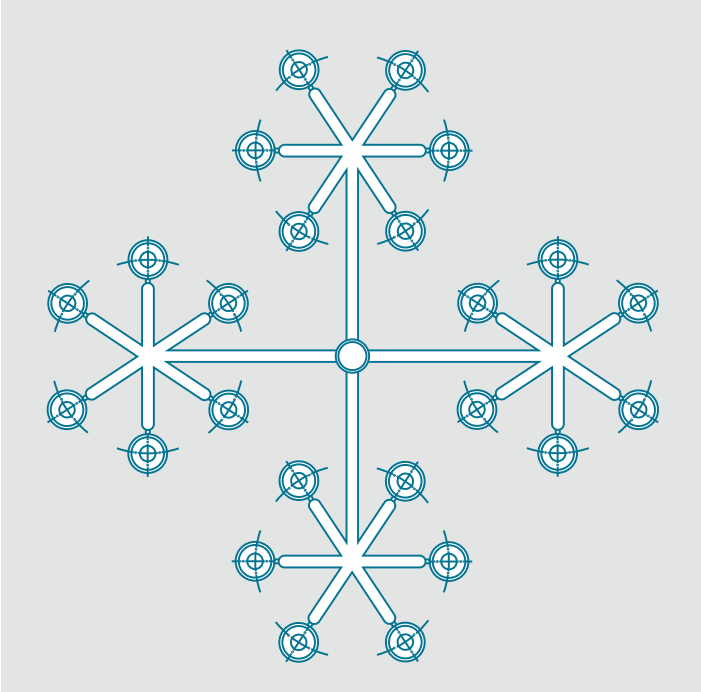

Fig. 14

2026-02-12 15:00:00 Distribuited by Mito polimeri

3. Processing by injection molding

Pin-point gates must have a weakened point on the gate cross section to ensure a clean tear-off. Large pin-point gates must not involve any jetting, otherwise squeeze marks can occur on the component. With axially symmetric parts, it may be useful to work with ring-type or diaphragm gates to prevent the formation of flow lines. Mold filling and venting must be kept under tight control *(Fig. 15)*.

A film gate is an advantage with large flat, long parts, as the mold is optimally filled *(Fig. 16)*. A tunnel gate is the best solution if the gating point is not visible *(Fig. 17)*.

Gate forms

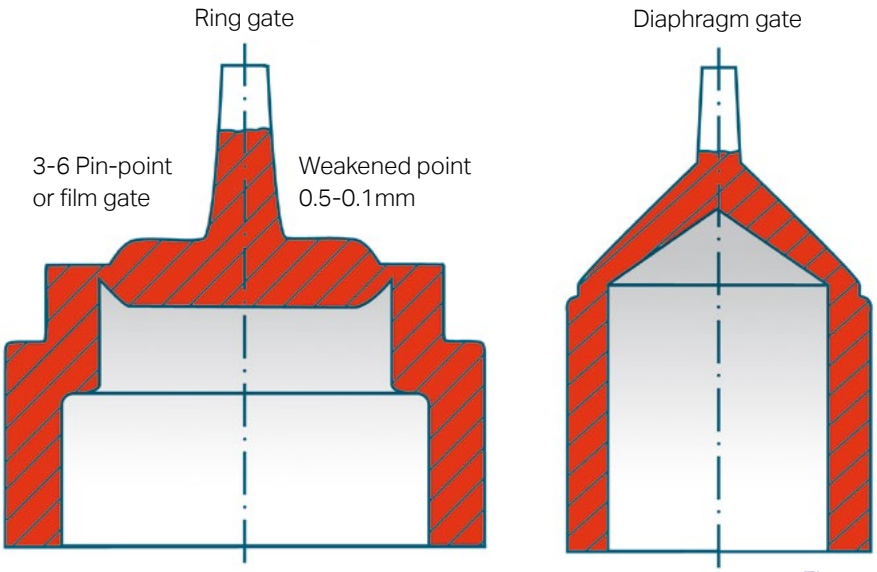

Fig. 15

"Coathanger"-type film gate

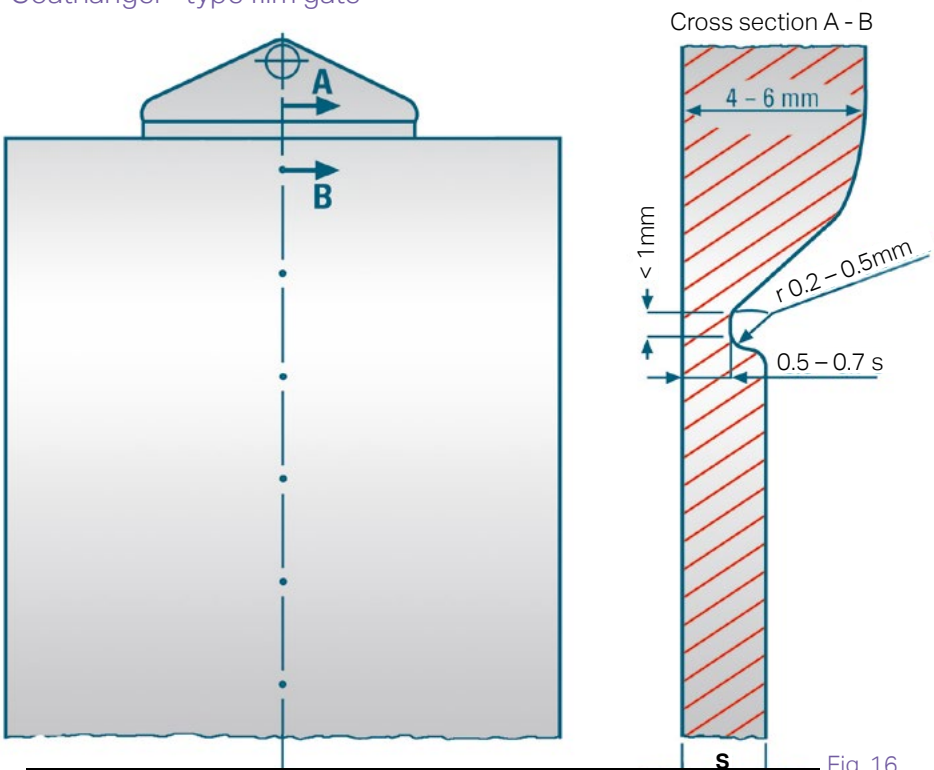

Fig. 16

2026-02-12 15:00:00 Distributed by Mito polimeri

Tunnel gate with lenticular feed

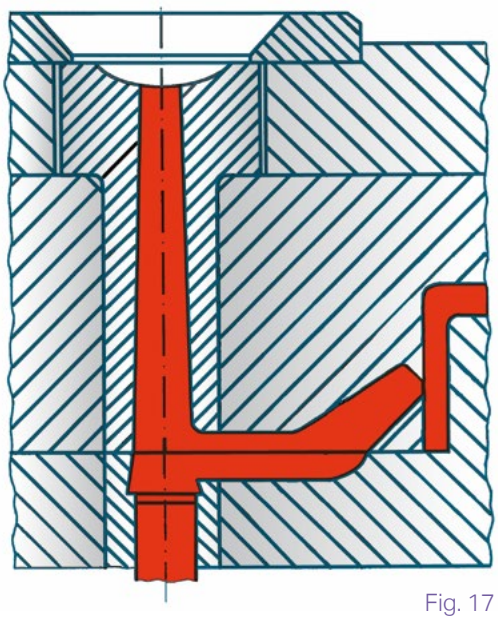

Fig. 17

3.4.3 Hot runner technique and hot runner nozzles

Hot runner feed systems are becoming increasingly popular in the processing of thermoplastics. With Covestro's TPU, too, this technique is being used more and more often. *Fig. 18* lists some of the main criteria for this method.

Demands on the hot runner system

1. Flow technology	2. Temperature control	3. Mechanical aspects
Optimum rheological design:	Good temperature control and precise temperature measurement:	Factors to take into account in the design of a hot runner:
• Minimal rise in temperature due to shear	• Adequate number of control circuits	• Injection pressure
• Tolerable shear rates (at flow restrictions < 5,000s^{-1})	• Position thermocouple where maximum temperatures occur	• Clamping, sealing and bearing forces
• Low pressure drop (open flow channels should be preferred to annular cross sections)	• Good thermal separation between cold injection molding tool and hot runner	• Thermal expansion
	• Uniform temperature over the entire length of the runner	• Surface of runner polished
		• Runner diameter < 7mm: Pressure increase
		• Runner diameter > 11mm: Long dwell time

Fig. 18

2026-02-12 15:00:00 Distributed by Mito polimeri

3. Processing by injection molding

Hot runner nozzles

Type 1: Open nozzle for direct gating

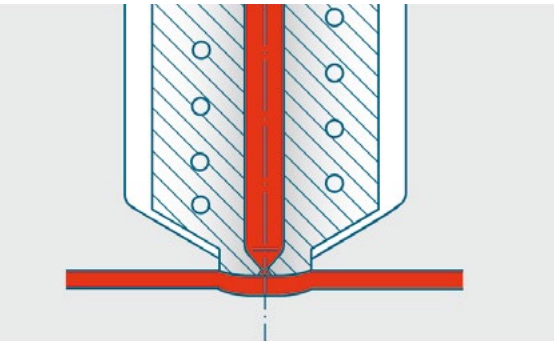

Fig. 19

- **Open nozzle without plastic insulating cap**

Not very common for processing TPU because of poor thermal separation, resulting in "shiners," haloing, sticking and material drooling *(Fig. 19)*.

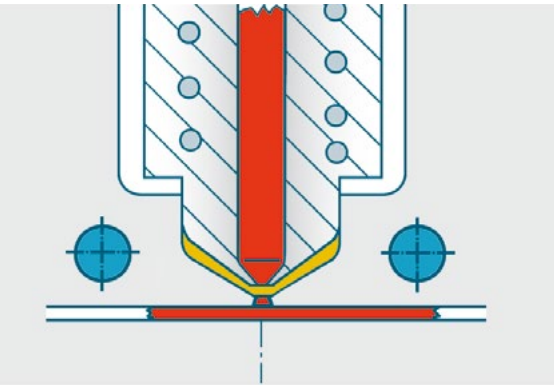

Fig. 20

- **Open nozzle with plastic insulating cap**

The insulating cap and cooling system lead to better thermal separation *(Fig. 20)*.

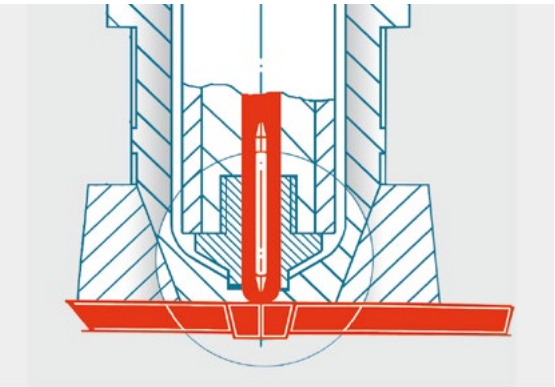

Fig. 21

- **Open nozzle with torpedo**

The narrow annular slit leads to excessive shear. Normally unsuitable for TPU *(Fig. 21)*.

2026-02-12 15:00:00 Distribuited by Mito polimeri

Type 2: Open nozzle with sprue

This system is used primarily for large molds (single / multiple cavity). The particular advantages of this construction are its low pressure losses and good thermal separation *(Fig. 22)*.

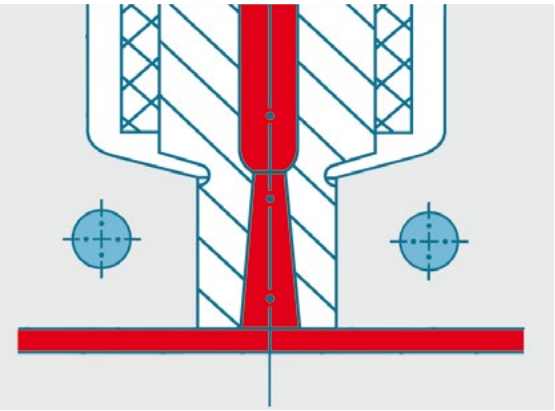

Fig. 22

Type 3: Nozzle with needle valve

A clean gating point can be placed directly on the component. This gating system is characterized by effective heat insulation and low pressure losses *(Fig. 23)*.

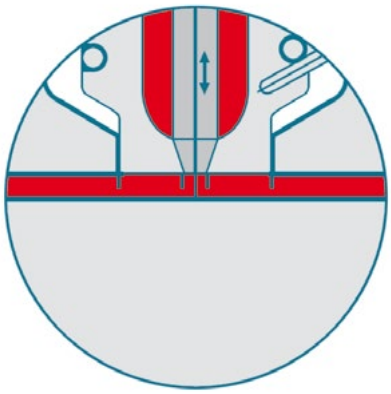

Wrong

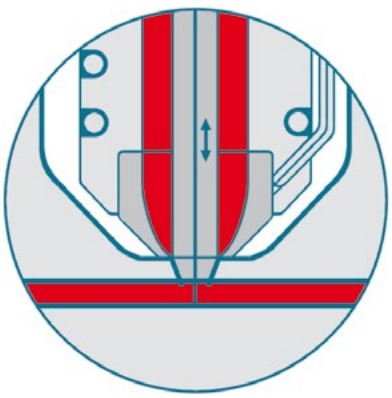

Right

Fig. 23

2026-02-12 15:00:00 Distribuited by Mito polimeri

3. Processing by injection molding

3.4.4 Flow characteristics of the mold

The flow behavior of Covestro's TPU is basically the same as that of other thermoplastics. The length of the flow path is dependent on the melt temperature, the wall thickness of the part to be filled, the injection speed and the rheological properties of the material. The injection speed can be varied according to the machine and the technical circumstances. *Fig. 24* shows the flow path of Covestro's TPU as a function of melt temperature.

3.4.5 Mold venting

Particularly with thickwalled parts of Covestro's TPU, good venting of the mold cavities is essential. At the parting line, grooves of 0.02 to 0.04mm in depth and 5mm in width have proved suitable *(Fig. 25).* If the area in which the air is compressed is not in the area of the mold parting line, adequate venting can also be achieved through pins and inserts with appropriate play.

Length of flow path as a function of temperature

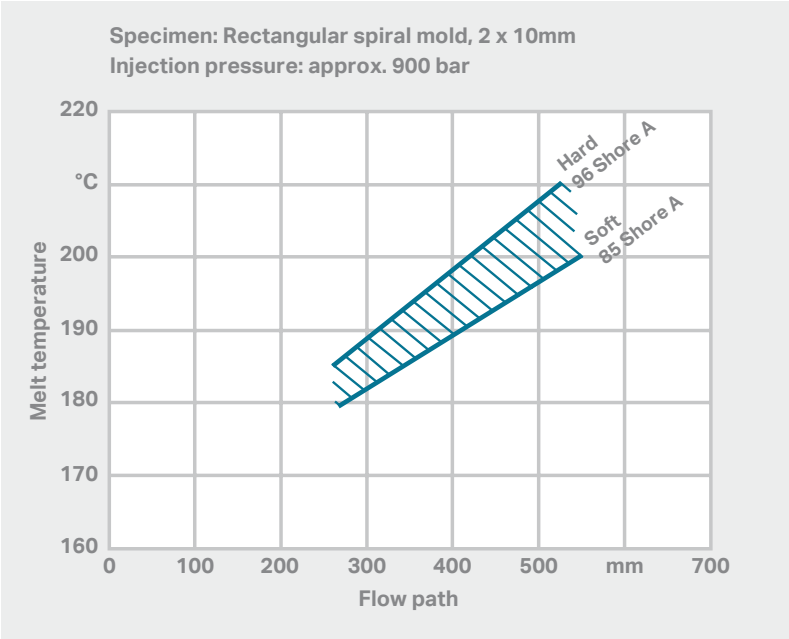

Fig. 24

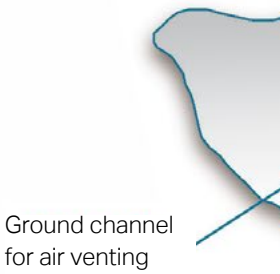

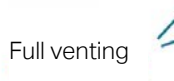

2026-02-12 15:00:00 Distributed by Mito polimeri

3.4.6 Shrinkage

It is only possible to fix the shrinkage data for mold design for thermoplastic polyurethanes within certain limits because the shape of the article, its wall thickness and the processing conditions all exert a significant influence on shrinkage. As a rough guide for mold design, a shrinkage of approximately 1% can be assumed. Minor differences in size are balanced out by the good elastic deformability. Post-molding shrinkage is greater with soft Covestro's TPU grades and thin-wall articles than it is with hard grades and greater wall thicknesses. *Fig. 26* gives an idea of the extent of overall shrinkage.

Comparison of the shrinkage ranges with Covestro's TPU

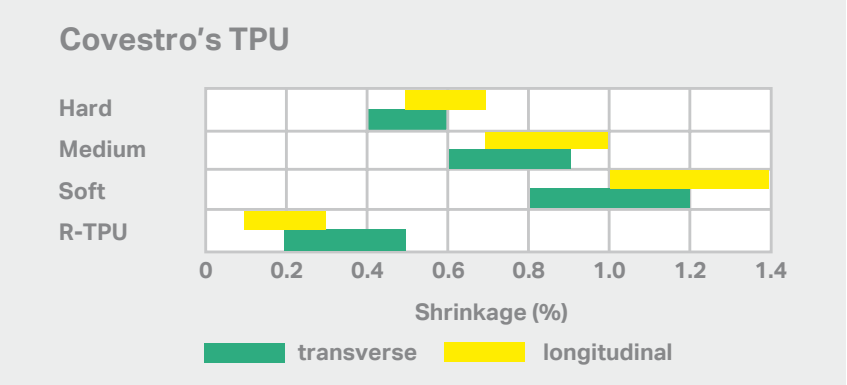

Fig. 26

Venting guidelines

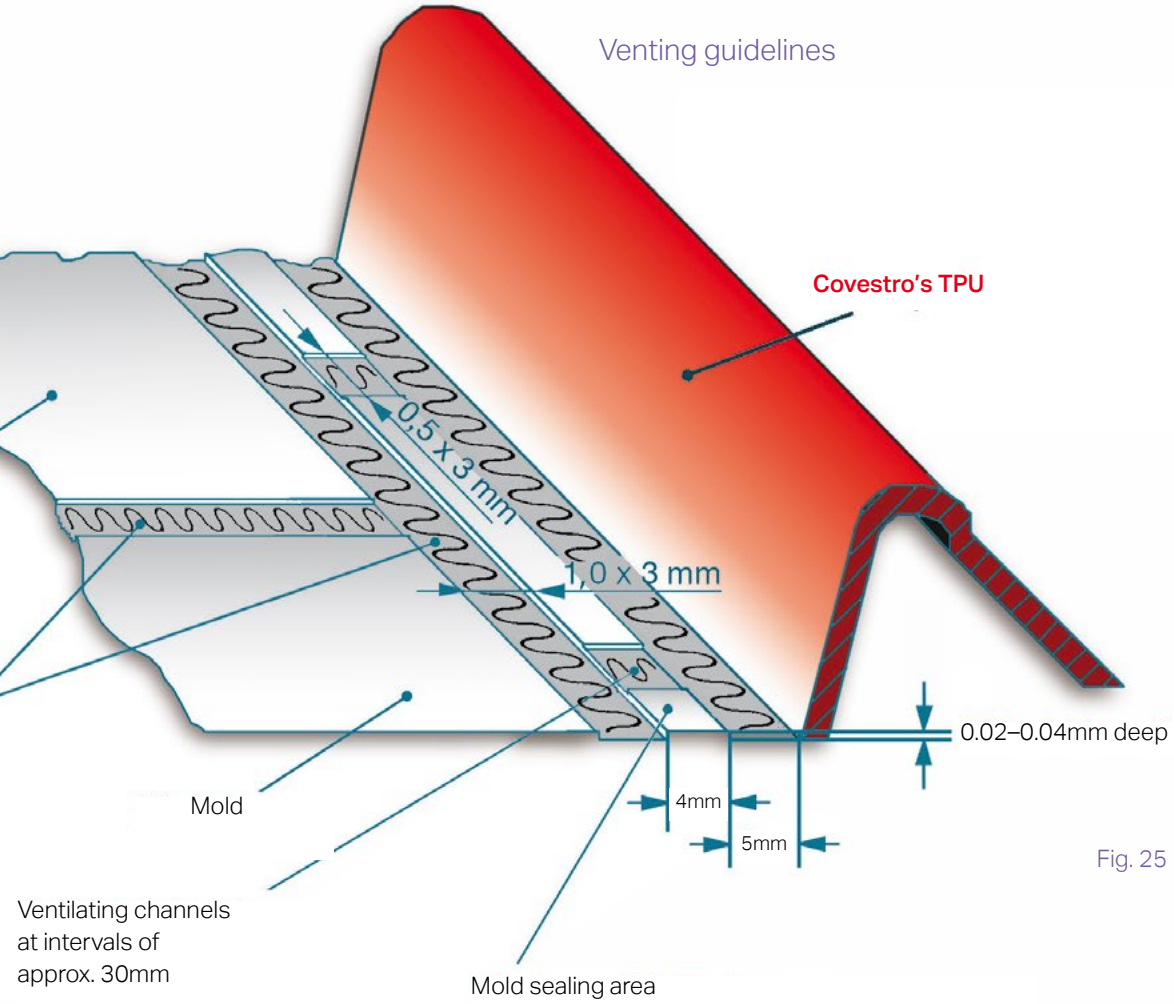

Fig. 25

2026-02-12 15:00:00 Distributed by Mito polimeri

Processing by injection molding

3.4.7 Demolding

3.4.7.1 Cavity surface

When demolding Covestro's TPU, a rough cavity surface is an advantage – such as a surface that complies with VDE 3400 (Ref. 24-33). This gives the lowest demolding forces by comparison with other types of surface roughness or coatings.

3.4.7.2 Draft

Mold drafts should be at least 5°C, particularly for components made of soft Covestro's TPU grades *(Fig. 27)*.

Draft

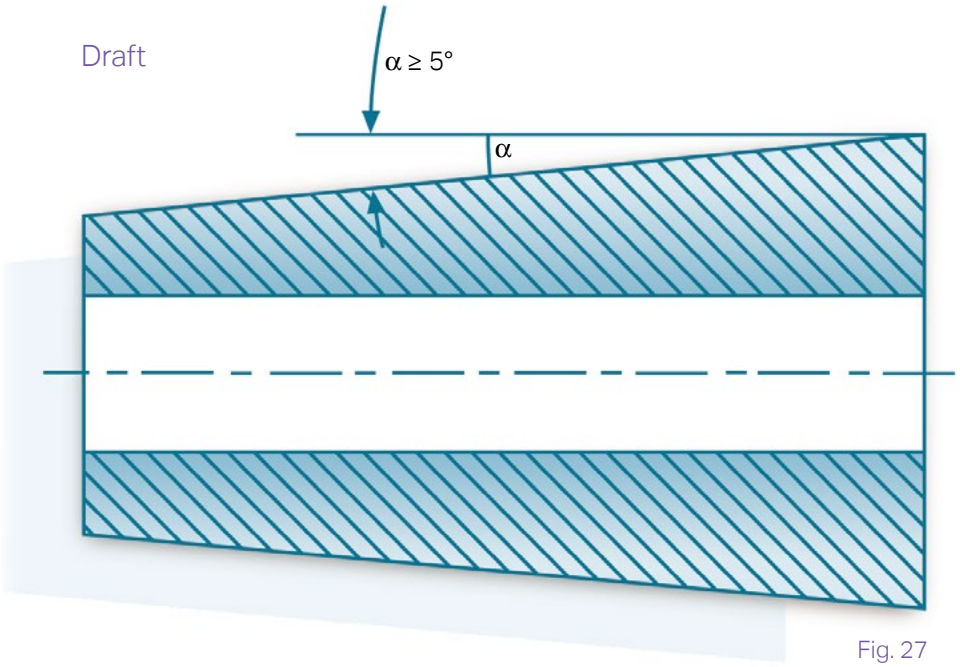

Fig. 27

2026-02-12 15:00:00 Distributed by Mito polimeri

3.4.7.3 Ejectors

For TPU, the surfaces of the ejectors should be as large as possible to avoid any deformation of the finished article *(Fig. 28)*.

The high elasticity of Covestro's TPU allows the demolding of undercuts and hollow articles. Blow moldings can be blown off the core using compressed air *(Fig. 29)*.

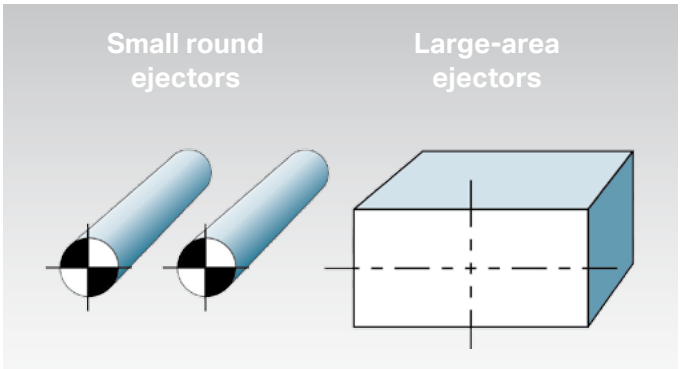

Fig. 28

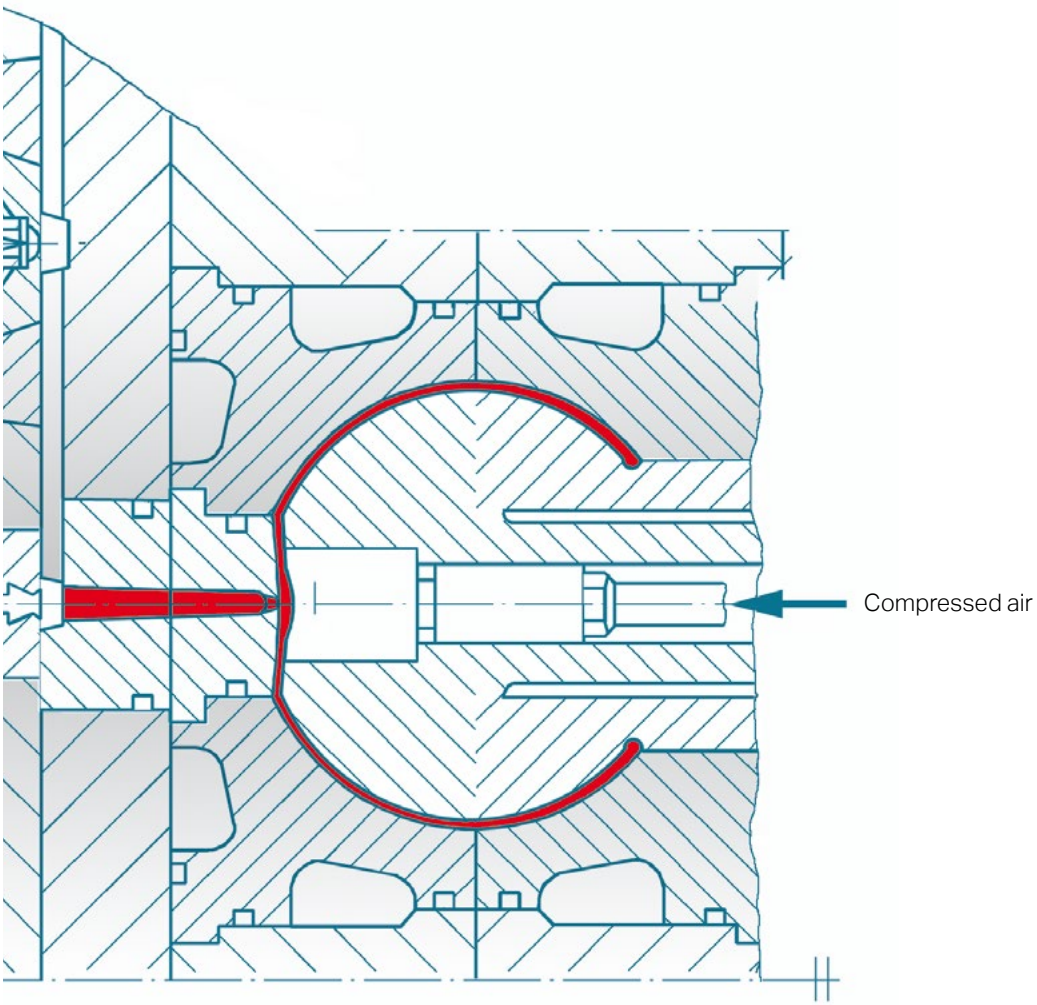

Fig. 29

2026-02-12 15:00:00 Distributed by Mito polimeri

4. Machining and fabrication

4.1 Bonding

Polyurethane- or cyanoacrylate-based systems for bonding Covestro's TPU are supplied by the adhesives industry under a variety of trade names.

Cyanoacrylate adhesives cure extremely quickly, but are brittle. The bonded joint breaks under pressure, so they are only suitable to a limited extent for elastic, flexible materials such as TPU. They should only be used for temporary bonds or bonds that are not subject to bending.

Polyurethane adhesives take longer to cure but, like Covestro's TPU, are flexible and elastic. They are therefore ideal for long-lasting bonded joints.

Only a few solvents (including NMP, DMF, MEK) dissolve Covestro's TPU to such an extent that it is possible to produce a bonded joint. These solvents are harmful to health, and it is essential that the information given in the Safety Data Sheets be observed.

4.2 Bonding of metals

Covestro's TPU can be used to produce high-strength bonds with metals. The surface of the metal must first be treated with adhesion promoters. These are normally applied as a solution by spraying, coating or immersion. The pretreated metal parts can then be insert-molded. It is essential to read the instructions for processing metal adhesion promoters carefully. Our experts can provide recommendations about the appropriate adhesion promoters to use with Covestro's TPU.

4.3 Printing

Covestro's TPU parts can be printed using any conventional technique:

- **Hot embossing**
- **Ink-jet printing**
- **Pad printing**
- **Laser printing**

4.3.1 Hot embossing / Hot stamping

In this printing technique, films or foils are embossed on a Covestro's TPU part using a hot stamp.

Hot embossing films are available from various suppliers and display excellent adhesion to the parts.

4.3.2 Ink-jet printing

Ink-jet printing is a very effective method for inscribing Covestro's TPU. We recommend that you adjust the solvent in the ink to suit TPU.

4.3.3 Pad printing

Pad printing is another very effective method for inscribing Covestro's TPU. Again, the composition of the solvent in the ink should be adjusted to TPU.

4.3.4 Laser printing

Covestro's TPU cannot be laser printed without first being modified, because their energy absorption is too low. They must first be compounded with laser additives or laser additive batches. We would be happy to provide recommendations about suitable additives on request.

4.4 Coating

Covestro's TPU are outstandingly well suited to coating and yield high-strength coatings. Because of the excellent elasticity of Covestro's TPU, two-component polyurethane coatings (DD coatings) are normally used. A primer has to be applied to the cleaned, grease-free parts before coating. It should be formulated for Covestro's TPU and dissolve Covestro's TPU on the surface to ensure that a strong bond is created with the topcoat.

4.5 Metallizing

New techniques have been introduced to enable the surface of Covestro's TPU to be metallized. The thin metal coating is so elastic that the TPU part can withstand bending up to a

2026-02-12 15:00:00 Distributed by Mito polimeri



certain angle without cracking. We would be happy to put you in touch with selected partner companies that specialize in this technique on request.

4.6 Welding

Covestro's TPU components can be joined together by welding. Suitable methods include:

- **Hot air and nitrogen welding**
- **Hot plate welding**
- **Heated tool and heat impulse welding**
- **High-frequency welding**
- **Friction welding**
- **Vibration welding**

In all cases, an efficient extractor must be provided for any carbonization gases.

4.6.1 Hot air and nitrogen welding

When welding with hot air or hot nitrogen, the flow of gas (measured 1cm in front of the nozzle) should have a temperature of 290-330°C. To increase the weld strength, it is advisable to solidify the plastic weld with a cooled pressure roller.

4.6.2 Hot plate welding

Hot plate welding is particularly useful for the butt-welding of profiles. Both surfaces are melted on plates heated to 290-330°C and joined together under pressure so as to produce a bead. This bead can, if necessary, be machined off after cooling.

4.6.3 Heated tool and heat impulse welding

The heated tool and heat impulse welding methods are suitable primarily for thin-walled articles and film. Care must be taken with these processes that sufficient pressure is exerted on the two parts being joined until the weld has cooled.

4.6.4 High-frequency welding

Covestro's TPU can be joined very well indeed by high-frequency welding. A 1mm-thick film can be welded perfectly on a 2kW unit, and a weld strength of 70-95% of the material's strength is achieved. Even with film of 2mm thickness, the weld strength is still 40-60%. The higher strength applies to soft Covestro's TPU grades and the lower one to hard grades.

4.6.5 Friction welding

Axially symmetrical parts of Covestro's TPU can be joined together by friction welding. With suitable apparatus, this process can also be used on the production line. Depending on the nature of the component and the holding device, the mean peripheral velocity of the rotating half of the component should be 300-500m/min. The faces of the parts being welded should be melted so that a bead becomes visible on pressing them together. The resultant loss of length must be established in preliminary trials and taken into account when dimensioning the component.

2026-02-12 15:00:00 Distributed by Mito polimeri

4. Machining and fabrication

4.6.6 Vibration welding

Vibration welding is useful in cases where friction welding is unsuitable because of the shape of the article. It enables large parts of differing geometries to be welded securely to each other. Vibration welding can be used for parts to be joined either at an angle or straight.

4.6.7 Ultrasonic welding

This welding technique is not recommended because of the high inherent damping of TPU. The strength of the welds is lower than with the other welding processes.

4.7 Machining

Sharp cutting tools are needed for Covestro's TPU. Hard grades can be machined as easily as polyamides. In the case of soft grades (<90 Shore A), the tough and elastic character of the material has to be taken into account. Covestro's TPU can be machined on normal metal and woodworking machines.
Excessive heat generation should be avoided and efficient removal of the shavings must be ensured. Tools of fast-cutting steel are suitable for machining Covestro's TPU. The tools must cut and not exert pressure. With large cutting



2026-02-12 15:00:00 Distribuited by Mito polimeri

depths, cooling with compressed air or drilling oil emulsions may be necessary. Recommendations for different types of machining are given on the following pages.

4.7.1 Sawing

Conventional saws can be used, but, especially when sawing by hand, saw blades intended for wood usually give better results than metal ones. Only saws with crossed teeth should be used.

4.7.2 Drilling

Twist drills with relief-ground cutting edges (clearance angle = 12-16°) and a small twist angle (approximately 30°) are recommended.
Drill tip = 150°
Cutting speed V = 40-50m/min
Advance s = 0.01-0.03mm/rev
Care must be taken to provide adequate ventilation and to remove the shavings. Cooling may be necessary for deeper holes.

4.7.3 Turning

Clearance angle = 5-15°
Effective tool side
rake = 25-30°
Cutting edge angle = 40-60°
Cutting speed, hard TPU
V = 100 -150m/min
Cutting speed, soft TPU
V = 300 - 500m/min
Advance velocity,
s = 0.1- 0.2mm/rev.
Tip radius = approx. 0.3mm-0.5mm

4.7.4 Milling and planing

Machines used for woodworking are suitable.
Clearance angle = 5-15°
Effective tool side rake = 15°
Cutting speed V = approx. 1,000m/min
Advance up to 0.5mm/rev

4.7.5 Punching

Harder TPU types can be punched more easily and accurately.
Average cutting speed:
50-100mm/sec

4.7.6 Thread cutting

Thread cutting is possible with hard Covestro's TPU. The screw taps must be very sharp indeed and the pre-drilling hole should be approximately 0.1mm larger than is usual with steel.

4.7.7 Grinding

Soft, ceramically bonded silicon carbide discs with a fine glass paper grain have proved successful for this purpose. The resultant dust must be effectively extracted.

2026-02-12 15:00:00 Distribuited by Mito polimeri

5. Index

A

abrasion resistance 5, 11
additives 9
adhesives. 26
advantages of Covestro's TPU 5

B

back pressure 13-14
blow molding 6, 25
bonding 5, 26
butt-welding 27

C

cavity surface 17, 24
circulating air dryers. 9
coatings. 24, 26
coloring 5, 8
cooling 7, 12
corrosion resistance 11
cyanoacrylate adhesives. 26
cycle time. 14-15
cylinder head 10
cylinder heating. 11, 12

D

decomposition 9
defects 7
demolding 14-15, 23
diaphragm gate 16, 18
dimensional stability. 14
drafts 24
drilling 29
dry-air dryers 7
drying 7
dwell time. 13

E

edge gate. 16
ejectors 25
elasticity 5
energy efficiency. 9
environmental information. 9
extrusion 6

F

film gate. 16, 18
flexibility. 5
flow behavior 22
flow channel 17, 19
flow path 22
friction welding 27
functional concentrates 7, 9

G

gate forms 18
gating 16
grinding 29

H

hardness 8, 12, 24, 28
heat impulse welding 27
heated tool welding 27
high-frequency welding 27
holding pressure 14
hollow articles. 15-25
hot embossing 26
hot plate welding 27
hot runner gate 16, 19
hot runner nozzles 19, 20
hot air welding. 27
hot stamping 26

I

impact strength. 5
incineration 9
injection molding 6, 10-25
injection pressure 14-15, 19
injection speed 14, 22
ink-jet printing 26
internal stresses 14

L

laser printing. 26

2026-02-12 15:00:00 Distributed by Mito polimeri

M

machining 27-29
masterbatches 8
material overheating. 10
melt temperature. 12-13, 22
metal bonding. 26
metallizing 26-27
metering stroke. 13
milling 29
moisture 6-8, 10
mold design 15-17, 23
mold temperature 12-13
mold venting. 22
multi-cavity mold. 16-17
multi-daylight mold 16

N

needle valve 21
nitrogen welding 27
nozzles 11, 12, 19-21

O

occupational hygiene. 9
oil resistance 5

P

pad printing 26
pastes. 8
pin-point gate 16
planing. 29
plastication. 13
polyurethane adhesives 26
positive mold 16
post-treatment 8
pretreatment. 6-7
printing 26
processing parameters. 12
punching 29

R

recycling 5, 15
regrind usage 15
release aids 9, 15
ring gates. 16, 18
rot resistance 5
runners . . . . . .

S

sampling 6
sawing. 29
scrap. 15
screws. 10-11, 13
screw drive. 10
screw speed. 13
shear stress 10
shot volume 13
shrinkage. 13, 23
sink marks 14
solvents. 26
split mold 16
sprue. 16, 21
squeeze marks 18
static mixer. 8
storage 6

T

temperature control 11
thermocouple. 19
thermoplastic polyurethanes 4, 16
thread cutting 29
three-plate mold 16
three-zone screws 10
torque 10
turning. 29
tunnel gate 16, 18-19
two-plate mold 16

U

ultrasonic welding 27-28
UV stabilizers 9

V

venting 22-23
vibration welding 27-28

W

wall adhesion 15
waste disposal 9
welding 5, 27-28

2026-02-12 15:00:00 Distributed by Mito polimeri

Covestro Deutschland AG
CHEMPARK Dormagen
Alte Heerstraße
Building F29
41538 Dormagen
e-mail: info@covestro.com

This information and our technical advice – whether verbal, in writing or by ways of trial –are given in good faith but without warranty, and this also applies where proprietary rights of third parties are involved. The information is provided by Covestro without assumption of any liability. If any of the above mentioned regulations change after the date of declaration, this declaration is no longer valid. Covestro will strive to keep this information up-to-date. Our advice does not release you from the obligation to verify the information provided – especially that contained in our safety data and technical information sheets –, to check for updates of any information provided by us and to test our products as to their suitability for the intended processes and uses. The application, use and processing of our products and the products manufactured by you on the basis of our technical advice are beyond our control and, therefore, entirely your own responsibility. Our products are sold in accordance with the current version of our General Conditions of Sale and Delivery.

2026-02-12 15:00:00 Distribuited by Mito polimeri